Excel Security Innovation



MODEL

D/MKIT SINGLE

SINGLE-SIGNAL DOOR MONITORING KIT

Door status monitoring kit designed to add door-position monitoring. The contacts operate independently of the maglock and do not require power from the lock. Supplied complete with mounting plate and fixing hardware.

Material Anodized Aluminium

DIMENSIONS (mm)

CODE: LOZENGE & DS PLT SGL

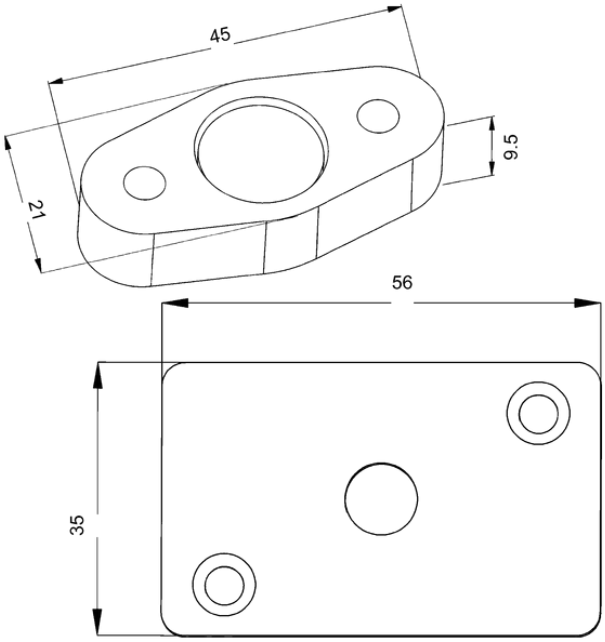

RELATED PRODUCTS


600DSKIT


1200DSKIT


ZL-266


ZL-250


12220SS-EX


6250LD

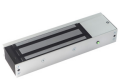
12266LD

ESI Access Sdn Bhd
24, Jalan Industri USJ 1/12, Taman Perindustrian USJ 1, 47610 Subang Jaya, Selangor, Malaysia.
+603 8024 9318
sales@esi-access.com
www.esi-access.com

AGM10327